## MCC 외형도

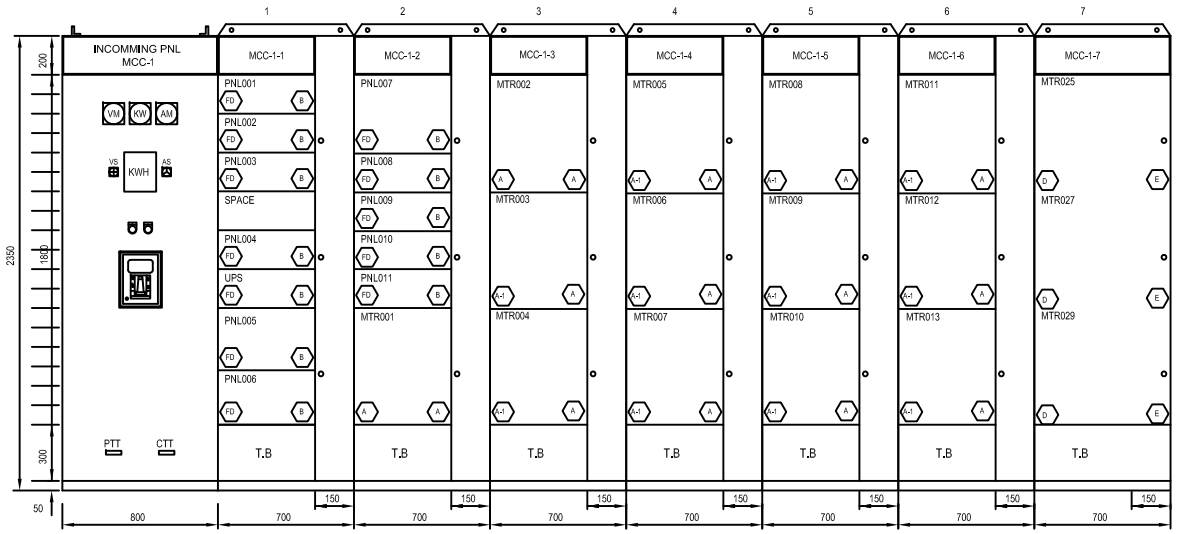


## FRONT VIEW

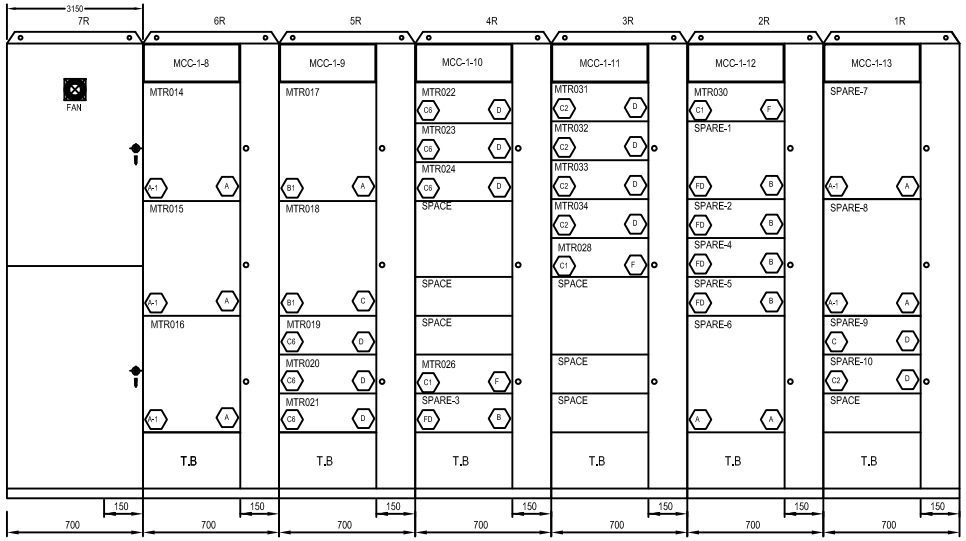


## REAR VIEW

## BASE상세도

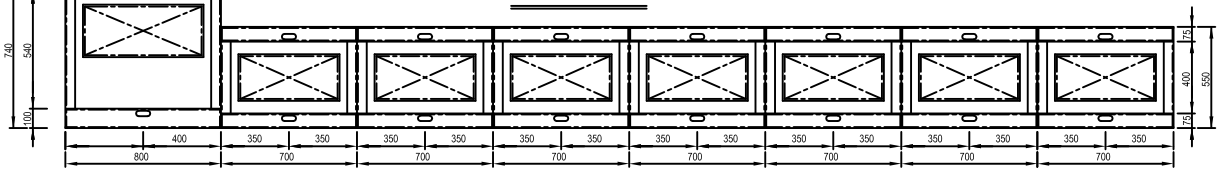


| REV. | DATE | DRN | CHKD | APPD | DESCRIPTION |
|---|---|---|---|---|---|

CLIENT

CONTRACTOR

[주] 호 원 아 이 엔 씨
HOWON Instrument & control Co., Ltd.

PROJECT

| | | |
|---|---|---|
| JOB No. | - | TITLE: MCC PANEL PANEL LAYOUT |
| DRAWN | S.Y.SUN | |
| CHECKED | J.MINJ.EE | |
| APPROVED | Y.B.YOO | |
| SCALE | DATE DRAWN | DWG NO.: REV. |
| N/A | May.15'15 | |
| TECHNICAL NO. | | CLIENT DWG NO.: REV. |
| - | | |

A3 (420 x 297 m/m)

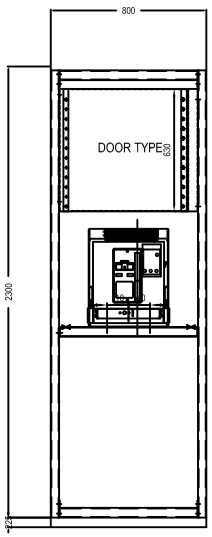


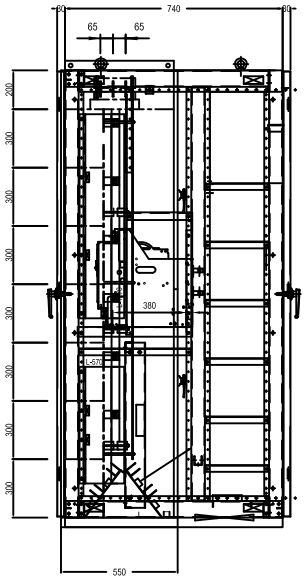


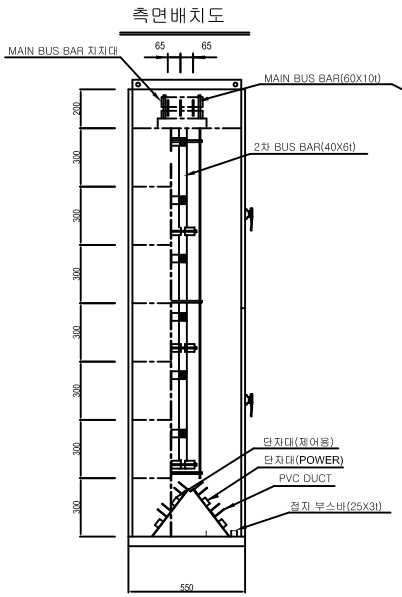


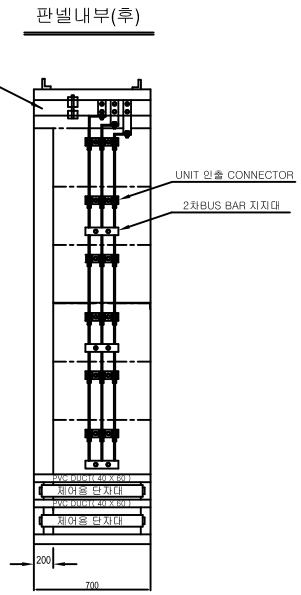


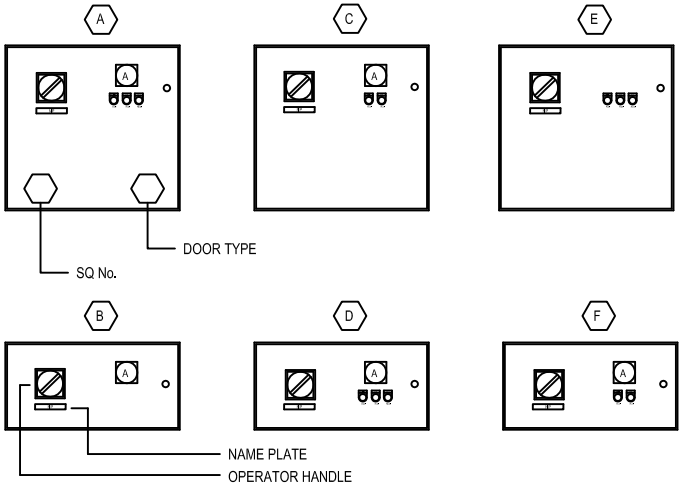


UNIT TYPE

| REV. | DATE | DRN | CHKD | APPD | DESCRIPTION |
|---|---|---|---|---|---|

CLIENT

CONTRACTOR

[주] 호 원 아 이 엔 씨
HOWON Instrument & control Co., Ltd.

PROJECT

| | | |
|---|---|---|
| JOB No. | - | TITLE: MCC PANEL PANEL LAYOUT |
| DRAWN | S.Y.SUN | |
| CHECKED | J.MINJ.EE | |
| APPROVED | Y.B.YOO | |
| SCALE N/A | DATE DRAWN May.15'15 | DWG NO.: REV. |
| TECHNICAL NO. - | | CLIENT DWG NO.: REV. |

A3 (420 x 297 m/m)

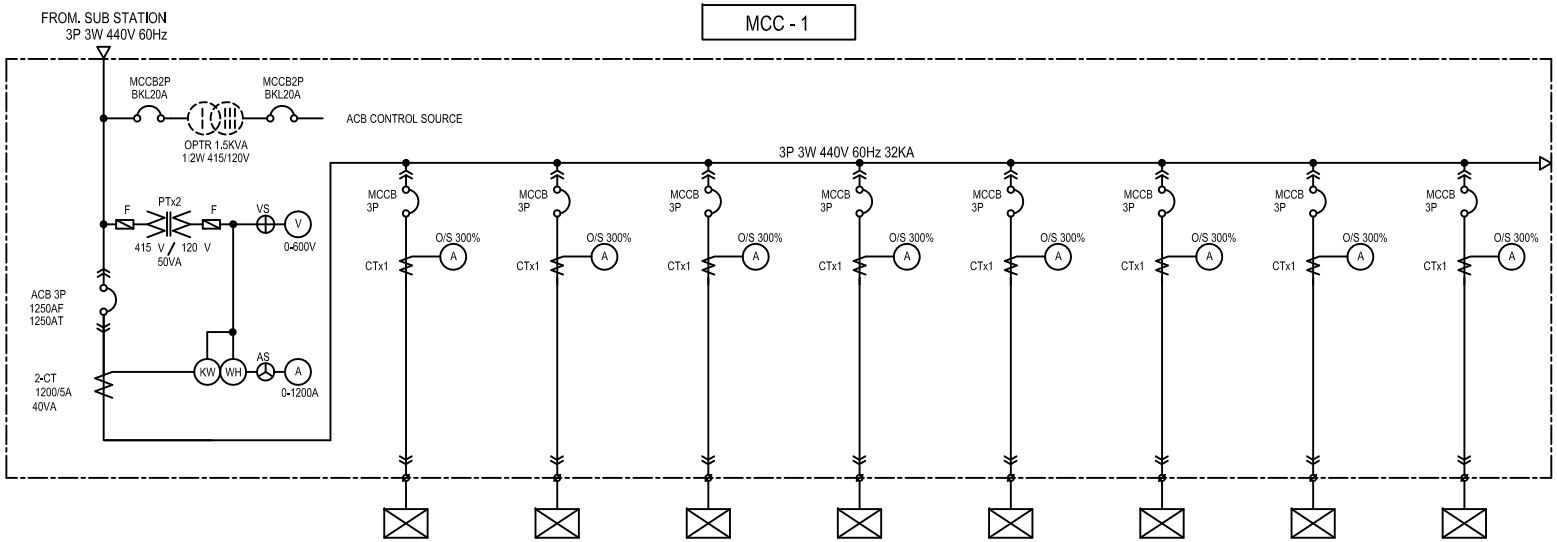


| ITEM NO | | PNL001 | PNL002 | PNL003 | PNL004 | UPS | PNL005 | PNL006 | PNL007 |
|---|---|---|---|---|---|---|---|---|---|
| SERVICE | | PANEL 001 | PANEL 002 | PANEL 003 | PANEL 004 | UPS | PANEL 005 | PANEL 006 | PANEL 007 |
| LOAD CAPACITY (KW) | | 3.7KW | 5.5KW | 20KW | 4.5KW | 10KW | 43.2KW | 51KW | 32KW |
| MCCB AF/AT | | T2N160 TMD20 | T2N160 TMD32 | T2N160 TMA80 | T2N160 TMD32 | T2N160 TMD40 | T4N250 TMA160 | T4N250 TMA160 | T2N160 TMD125 |
| MAGNETIC CONTACTOR | MCM(88) | | | | | | | | |
| | MCR(88) | | | | | | | | |
| | MCD(19) | | | | | | | | |
| | MCY(9) | | | | | | | | |
| EOCR | | | | | | | | | |
| CT | | 20/5A | 30/5A | 75/5A | 30/5A | 40/5A | 150/5A | 150/5A | 100/5A |
| AM | | 0~20A | 0~30A | 0~75A | 0~30A | 0~40A | 0~150A | 0~150A | 0~100A |
| POWER TB (A) | | 3P 30A | 3P 30A | 3P 100A | 3P 30A | 3P 60A | 3P 150A | 3P 150A | 3P 100A |
| POWER WIRE (Sq) | | 4 | 4 | 16 | 4 | 6 | 50 | 50 | 50 |
| CONDENSER(UF) | | - | - | - | - | - | - | - | - |
| PBL / PL | | - | - | - | - | - | - | - | - |
| S/SW(2a2b) / COS | | - | - | - | - | - | - | - | - |
| SEQUENCE TYPE | | FEEDER | FEEDER | FEEDER | FEEDER | FEEDER | FEEDER | FEEDER | FEEDER |
| DOOR TYPE | | B | B | B | B | B | B | B | B |
| LOP | | | | | | | | | |
| UNIT NO | | MCC-1-1-1 | MCC-1-1-2 | MCC-1-1-3 | MCC-1-1-5 | MCC-1-1-6 | MCC-1-1-7 | MCC-1-1-8 | MCC-1-2-1 |

| REV. | DATE | DRN | CHKD | APPD | DESCRIPTION |
|---|---|---|---|---|---|

CLIENT

CONTRACTOR

(주) 호 원 아 이 엔 씨
HOWON Instrument & control Co., Ltd.

PROJECT

| | | |
|---|---|---|
| JOB No. | - | TITLE: MCC PANEL SINGLE LINE DIAGRAM |
| DRAWN | S.Y.SUN | |
| CHECKED | J.MIN.LEE | |
| APPROVED | Y.B.YOO | |
| SCALE N/A | DATE DRAWN May.15.'15 | DWG NO.: REV. |
| TECHNICAL NO. - | | CLIENT DWG NO.: REV. |

A3 (420 x 297 m/m)

MCC - 1

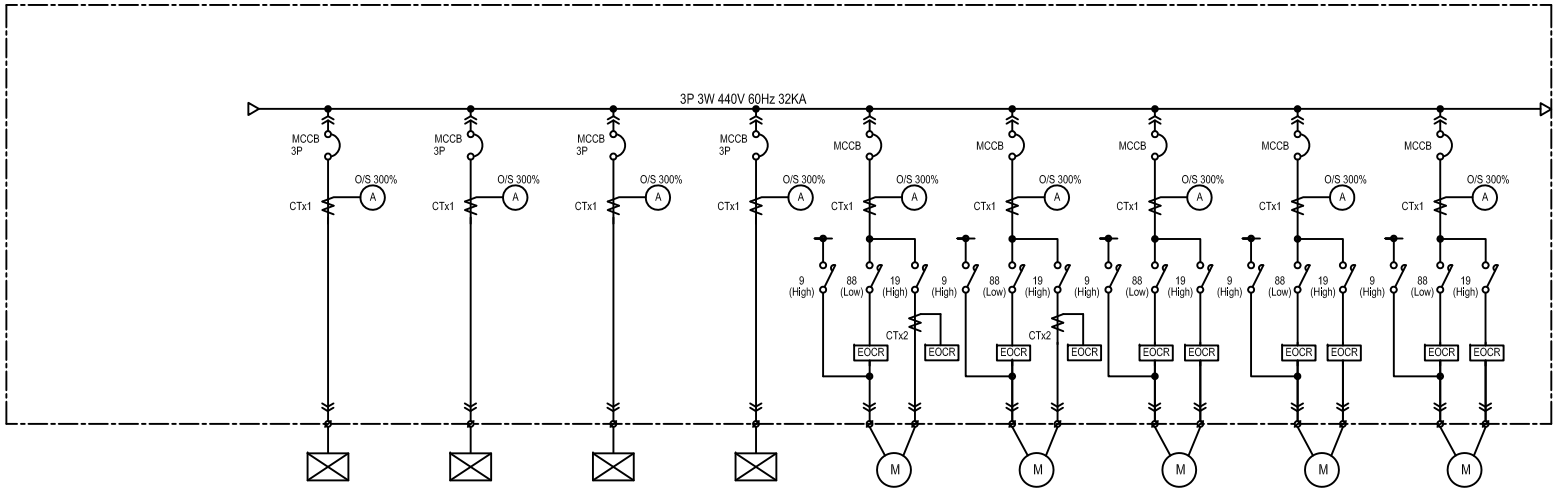


| ITEM NO | | PNL008 | PNL009 | PNL010 | PNL011 | MTR001 | MTR002 | MTR003 | MTR004 | MTR005 |
|---|---|---|---|---|---|---|---|---|---|---|
| SERVICE | | PANEL 008 | PANEL 009 | PANEL 010 | PANEL 011 | MOTOR 001 | MOTOR 002 | MOTOR 003 | MOTOR 004 | MOTOR 005 |
| LOAD CAPACITY (KW) | | 0,5KW | 0,5KW | 0,5KW | 2,2KW | 37 / 18,5KW | 30 / 15KW | 22 / 11KW | 22 / 11KW | 22 / 11KW |
| MCCB AF/AT | | T2N160 TMD20 | T2N160 TMD20 | T2N160 TMD20 | T2N160 TMD20 | T2N160 MA100 | T2N160 MA100 | T2N160 MA80 | T2N160 MA80 | T2N160 MA80 |
| MAGNETIC CONTACTOR | MCM(88,LOW) | | | | | A40 | A30 | A26 | A26 | A26 |
| | MCD(19,HIGH) | | | | | A75 | A63 | A50 | A50 | A50 |
| | MCY(9,HIGH) | | | | | A40 | A30 | A26 | A26 | A26 |
| Dz/Fuse | | | | | | BKM 2A | BKM 2A | BKM 2A | BKM 2A | BKM 2A |
| EOCR | | | | | | EOCR-SS05,60 | EOCR-SS05,60 | EOCR-SS30,60 | EOCR-SS30,60 | EOCR-SS30,60 |
| CT | | 10/5A | 10/5A | 10/5A | 20/5A | 120/5A 75/5Ax2(EOCR) | 100/5A 75/5Ax2 (EOCR) | 75/5A | 75/5A | 75/5A |
| AM | | 0~10A | 0~10A | 0~10A | 0~20~60A | 0~120~360A | 0~100~300A | 0~75~225A | 0~75~225A | 0~75~225A |
| POWER TB (A) | | 3P 30A | 3P 30A | 3P 30A | 3P 30A | 3P 100A X 2 | 3P 60A X 2 | 3P 60Ax2 | 3P 60Ax2 | 3P 60Ax2 |
| POWER WIRE (Sq) | | 4 | 4 | 4 | 4 | 35x2 | 25x2 | 16x2 | 16x2 | 16x2 |
| ON DELAY TIMER | | - | - | - | - | 1 | 1 | 1 | 1 | 1 |
| PBL / PL | | - | - | - | - | 1/2 | 1/2 | 1/2 | 1/2 | 1/2 |
| Aux Relay(MY4 4a4b) | | - | - | - | - | 5 | 5 | 5 | 5 | 5 |
| SEQUENCE TYPE | | FEEDER | FEEDER | FEEDER | FEEDER | A | A | A-1 | A-1 | A-1 |
| DOOR TYPE | | B | B | B | B | A | A | A | A | A |
| LOP | | | | | | LCP-AFT15001 | LCP-AFT10001 | LCP-AFT6001 | LCP-AFT6002 | LCP-AFT6003 |
| UNIT NO | | MCC-1-2-2 | MCC-1-2-3 | MCC-1-2-4 | MCC-1-2-5 | MCC-1-2-6 | MCC-1-3-1 | MCC-1-3-2 | MCC-1-3-3 | MCC-1-4-1 |

| REV. | DATE | DRN | CHKD | APPD | DESCRIPTION |
|---|---|---|---|---|---|

CLIENT

CONTRACTOR

(주) 호 원 아 이 엔 씨
HOWON Instrument & control Co., Ltd.

PROJECT

| | | |
|---|---|---|
| JOB No. | - | TITLE: MCC PANEL SINGLE LINE DIAGRAM |
| DRAWN | S.Y.SUN | |
| CHECKED | J.MIN.LEE | |
| APPROVED | Y.B.YOO | |
| SCALE N/A | DATE DRAWN May.15'15 | DWG NO.: REV. |
| TECHNICAL NO. - | | CLIENT DWG NO.: REV. |

A3 (420 x 297 m/m)

MCC - 1

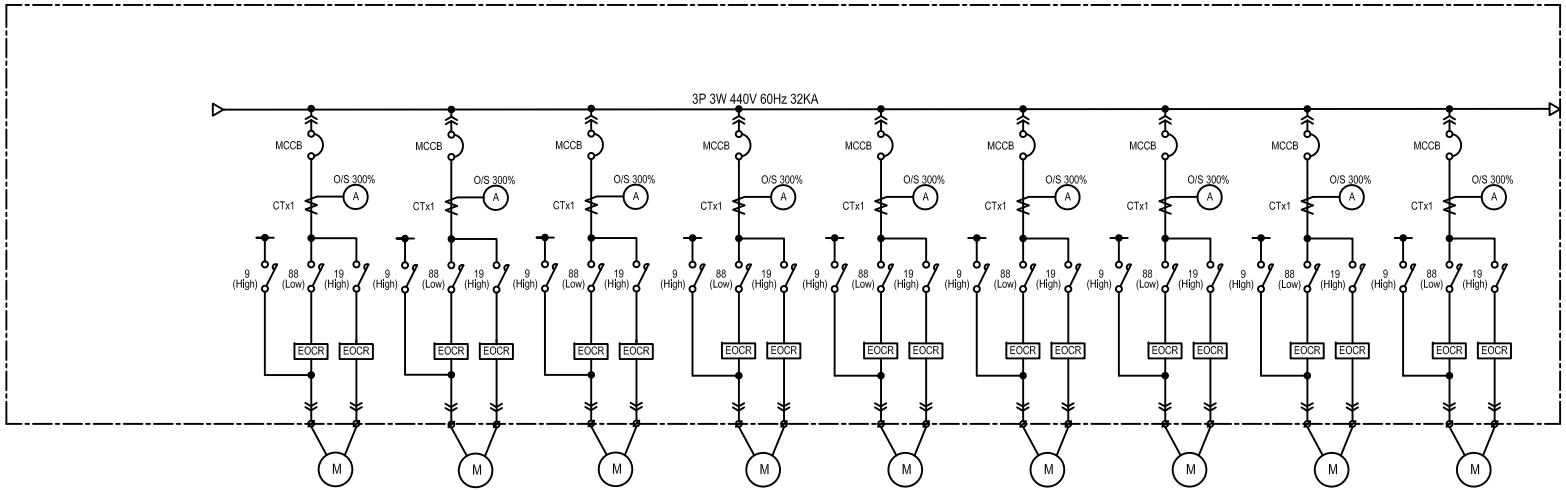


| ITEM NO | | MTR006 | MTR007 | MIT008 | MTR009 | MTR010 | MTR011 | MTR012 | MTR013 | MTR014 |
|---|---|---|---|---|---|---|---|---|---|---|
| SERVICE | | MOTOR 006 | MOTOR 007 | MOTOR 008 | MOTOR 009 | MOTOR 010 | MOTOR 011 | MOTOR 012 | MOTOR 013 | MOTOR 014 |
| LOAD CAPACITY (KW) | | 22 / 11KW | 11 / 5.5KW | 22 / 11KW | 15 / 7.5KW | 15 / 7.5KW | 15 / 7.5KW | 15 / 7.5KW | 15 / 7.5KW | 15 / 7.5KW |
| MCCB AF/AT | | T2N160 MA80 | T2N160 MA52 | T2N160 MA80 | T2N160 MA52 | T2N160 MA52 | T2N160 MA52 | T2N160 MA52 | T2N160 MA52 | T2N160 MA52 |
| MAGNETIC CONTACTOR | MCM(88,Low) | A26 | A12 | A26 | A16 | A16 | A16 | A16 | A16 | A16 |
| | MCD(19,HIgh) | A50 | A26 | A50 | A30 | A30 | A30 | A30 | A30 | A30 |
| | MCY(9,HIgh) | A26 | A12 | A26 | A16 | A16 | A16 | A16 | A16 | A16 |
| Dz/Fuse | | BKM 2A | BKM 2A | BKM 2A | BKM 2A | BKM 2A | BKM 2A | BKM 2A | BKM 2A | BKM 2A |
| EOCR | | EOCR-SS60 | EOCR-SS30,60 | EOCR-SS30,60 | EOCR-SS60, 30 | EOCR-SS60, 30 | EOCR-SS60, 30 | EOCR-SS60, 30 | EOCR-SS60, 30 | EOCR-SS60, 30 |
| CT | | 75/5A | 40/5A | 75/5A | 50/5A | 50/5A | 50/5A | 50/5A | 50/5A | 50/5A |
| AM | | 0~75~225A) | 0~40~120A | 0~75~225A) | 0~50~150A | 0~50~150A | 0~50~150A | 0~50~150A | 0~50~150A | 0~50~150A |
| POWER TB (A) | | 3P 60A X 2 | 3P 60A X 2 | 3P 60A X 2 | 3P 60A X 2 | 3P 60A X 2 | 3P 60A X 2 | 3P 60A X 2 | 3P 60A X 2 | 3P 60A X 2 |
| POWER WIRE (Sq) | | 16x2 | 6x2 | 16x2 | 10x2 | 10x2 | 10x2 | 10x2 | 10x2 | 10x2 |
| ON DELAY TIMER | | 1 | 1 | 1 | 1 | 1 | 1 | 1 | 1 | 1 |
| PBL / PL | | 1/2 | 1/2 | 1/2 | 1/2 | 1/2 | 1/2 | 1/2 | 1/2 | 1/2 |
| Aux Relay(MY 4a4b) | | 5 | 5 | 5 | 5 | 5 | 5 | 5 | 5 | 5 |
| SEQUENCE TYPE | | A-1 | A-1 | A-1 | A-1 | A-1 | A-1 | A-1 | A-1 | A-1 |
| DOOR TYPE | | A | A | A | A | A | A | A | A | A |
| LOP | | LCP-AFT6004 | LCP-AFT6005 | LCP-AFT4001 | LCP-AFT3001 | LCP-AFT3002 | LCP-AFT3003 | LCP-AFT3004 | LCP-AFT3005 | LCP-AFT2001 |
| UNIT NO | | MCC-1-4-2 | MCC-1-4-3 | MCC-1-5-1 | MCC-1-5-2 | MCC-1-5-3 | MCC-1-6-1 | MCC-1-6-2 | MCC-1-6-3 | MCC-1-6R-1 |

| REV. | DATE | DRN | CHKD | APPD | DESCRIPTION |
|---|---|---|---|---|---|

CLIENT

CONTRACTOR

(주) 호 원 아 이 엔 씨
HOWON Instrument & control Co., Ltd.

PROJECT

| | | |
|---|---|---|
| JOB No. | - | TITLE: MCC PANEL SINGLE LINE DIAGRAM |
| DRAWN | S.Y.SUN | |
| CHECKED | J.WN.LEE | |
| APPROVED | Y.B.YOO | |
| SCALE N/A | DATE DRAWN May.15'15 | DWG NO.: REV. |
| TECHNICAL NO. - | | CLIENT DWG NO.: REV. |

A3 (420 x 297 m/m)

MCC - 1

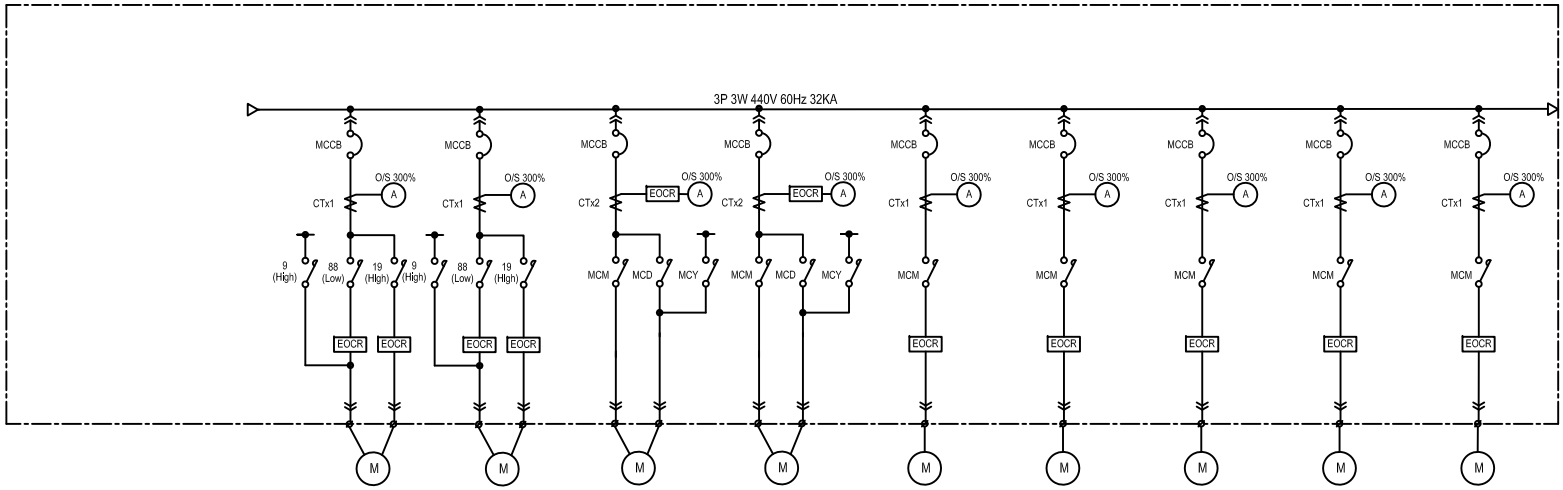


| ITEM NO | | MTR015 | MTR016 | MTR017 | MTR018 | MTR019 | MTR020 | MTR021 | MTR022 | MTR023 |
|---|---|---|---|---|---|---|---|---|---|---|
| SERVICE | | MOTOR 015 | MOTOR 016 | MOTOR 017 | MOTOR 018 | MOTOR 019 | MOTOR 020 | MOTOR 021 | MOTOR 022 | MOTOR 023 |
| LOAD CAPACITY (KW) | | 15 / 7.5KW | 15 / 7.5KW | 35KW | 35KW | 7.5KW | 7.5KW | 7.5KW | 7.5KW | 7.5KW |
| MCCB AF/AT | | T2N160 MA52 | T2N160 MA52 | T2N160 MA100 | T2N160 MA100 | T2N160 MA32 | T2N160 MA32 | T2N160 MA32 | T2N160 MA32 | T2N160 MA32 |
| MAGNETIC CONTACTOR | MCM(88,Low) | A16 | A16 | A40 | A40 | A16 | A16 | A16 | A16 | A16 |
| | MCD(19,High) | A30 | A30 | A50 | A50 | | | | | |
| | MCY(9,High) | A16 | A16 | A26 | A26 | | | | | |
| Dz/Fuse | | BKM 2A | BKM 2A | BKM 2A | BKM 2A | BKM 2A | BKM 2A | BKM 2A | BKM 2A | BKM 2A |
| EOCR | | EOCR-SS60, 30 | EOCR-SS60, 30 | EOCR-SS05 | EOCR-SS05 | EOCR-SS30 | EOCR-SS30 | EOCR-SS30 | EOCR-SS30 | EOCR-SS30 |
| CT | | 50/5A | 50/5A | 100/5A x2 | 100/5A x2 | 30/5A | 30/5A | 30/5A | 30/5A | 30/5A |
| AM | | 0~50~150A | 0~50~150A | 0~100~300A | 0~100~300A | 0~30~90A | 0~30~90A | 0~30~90A | 0~30~90A | 0~30~90A |
| POWER TB (A) | | 3P 60A X 2 | 3P 60A X 2 | 3P 100A X 2 | 3P 100A X 2 | 3P 30A | 3P 30A | 3P 30A | 3P 30A | 3P 30A |
| POWER WIRE (Sq) | | 10x2 | 10x2 | 35x2 | 35x2 | 6 | 6 | 6 | 6 | 6 |
| ON DELAY TIMER | | 1 | 1 | 2 | 2 | - | - | - | - | - |
| PBL / PL | | 1/2 | 1/2 | 1/2 | /2 | 1/2 | 1/2 | 1/2 | 1/2 | 1/2 |
| Aux Relay(MY4 4a4b) | | 5 | 5 | 3 | 2 | 3 | 3 | 3 | 3 | 3 |
| SEQUENCE TYPE | | A-1 | A-1 | B-1 | | C6 | C6 | C6 | C6 | C6 |
| DOOR TYPE | | A | A | A | C | D | D | D | D | D |
| LOP | | | | | | | | | | |
| UNIT NO | | MCC-1-6R-2 | MCC-1-6R-3 | MCC-1-5R-1 | MCC-1-5R-2 | MCC-1-5R-3 | MCC-1-5R-4 | MCC-1-5R-5 | MCC-1-4R-1 | MCC-1-4R-2 |

| REV. | DATE | DRN | CHKD | APPD | DESCRIPTION |
|---|---|---|---|---|---|

CLIENT

CONTRACTOR

(주) 호 원 아 이 엔 씨
HOWON Instrument & control Co., Ltd.

PROJECT

| | | |
|---|---|---|
| JOB No. | - | TITLE: MCC PANEL SINGLE LINE DIAGRAM |
| DRAWN | S.Y.SUN | |
| CHECKED | J.MIN.LEE | |
| APPROVED | Y.B.YOO | |
| SCALE N/A | DATE DRAWN May.15'15 | DWG NO.: REV. |
| TECHNICAL NO. - | | CLIENT DWG NO.: REV. |

A3 (420 x 297 m/m)

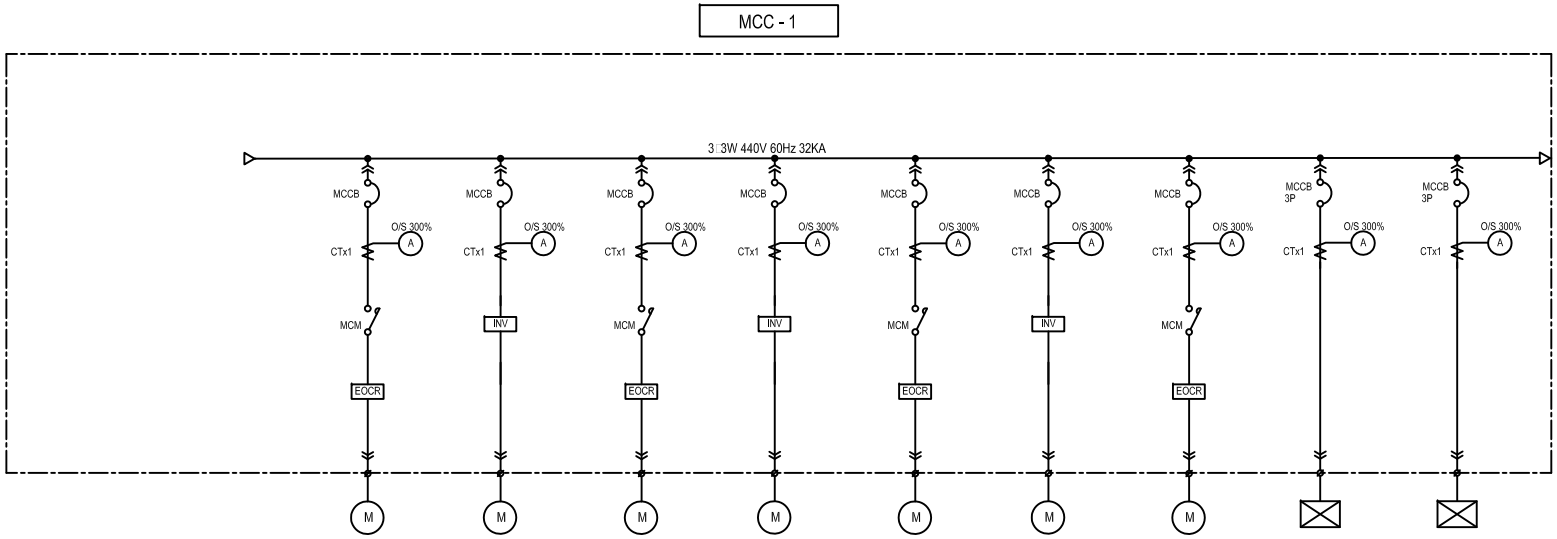


| ITEM NO | | MTR024 | MTR025 | MTR026 | MTR027 | MTR028 | MTR029 | MTR030 | | |
|---|---|---|---|---|---|---|---|---|---|---|
| SERVICE | | MOTOR 024 | MOTOR 025 | MOTOR 026 | MOTOR 027 | MOTOR 028 | MOTOR 029 | MOTOR 030 | SPARE-1 | SPARE-2 |
| LOAD CAPACITY (KW) | | 7.5KW | 22KW | 1.5KW | 7.5KW | 1.5KW | 7.5KW | 1.5KW | 51KVA | 20KVA |
| MCCB AF/AT | | T2N160 MA32 | T2N160 MA80 | T2N160 MA20 | T2N160 MA32 | T2N160 MA20 | T2N160 MA32 | T2N160 MA20 | T4N250 TMD160 | T2N160 TMD80 |
| MAGNETIC CONTACTOR | MCM(88,Low) | A16 | ACS550-01-044A-4(INV) | A12 | ACS550-01-015A-4(INV) | A12 | ACS550-01-015A-4(INV) | A12 | | |
| | MCD(19,High) | | | | | | | | | |
| | MCY(9,High) | | | | | | | | | |
| Dz/Fuse | | BKM 2A | BKM 2A | BKM 2A | BKM 2A | BKM 2A | BKM 2A | BKM 2A | | |
| EOCR | | EOCR-SS30 | | EOCR-SS05 | | EOCR-SS05 | | EOCR-SS05 | | |
| CT | | 30/5A | 75/5A | 10/5A | 20/5A | 10/5A | 20/5A (0~20~60A) | 10/5A | 150/5A | 75/5A |
| AM | | 0~30~90A | 0~75~225A | 0~10A | 0~20~60A | 0~10A | 20/5A (0~20~60A) | 0~10A | 0~150A | 0~75A |
| POWER TB (A) | | 3P 30A | 3P 100A | 3P 30A | 3P 30A | 3P 30A | 3P 30A | 3P 30A | 3P 150A | 3P 100A |
| POWER WIRE (Sq) | | 6 | 16 | 4 | 6 | 4 | 6 | 4 | 50 | 16 |
| ON DELAY TIMER | | - | - | - | - | - | - | - | - | - |
| PBL / PL | | 1/2 | 1/2 | 1/2 | 1/2 | 1/2 | 1/2 | 1/2 | - | - |
| Aux Relay(MY4 4a4b) | | 3 | - | 3 | - | 3 | - | - | - | - |
| SEQUENCE TYPE | | C6 | D | C-1 | D | C-1 | D | C-1 | FEEDER | FEEDER |
| DOOR TYPE | | D | E | F | E | F | E | F | B | B |
| LOP | | | | | | | | | | |
| UNIT NO | | MCC-1-4R-3 | MCC-1-7-1 | MCC-1-4R-7 | MCC-1-7-2 | MCC-1-3R-5 | MCC-1-7-3 | MCC-1-2R-1 | MCC-1-2R-2 | MCC-1-2R-3 |

| REV. | DATE | DRN | CHKD | APPD | DESCRIPTION |
|---|---|---|---|---|---|

CLIENT

CONTRACTOR

(주) 호 원 아 이 엔 씨
HOWON Instrument & control Co., Ltd.

PROJECT

| | | |
|---|---|---|
| JOB No. | - | TITLE: MCC PANEL SINGLE LINE DIAGRAM |
| DRAWN | S.Y.SUN | |
| CHECKED | J.WN.LEE | |
| APPROVED | Y.B.YOO | |
| SCALE N/A | DATE DRAWN May.15'15 | DWG NO.: REV. |
| TECHNICAL NO. - | | CLIENT DWG NO.: REV. |

A3 (420 x 297 m/m)

MCC - 1

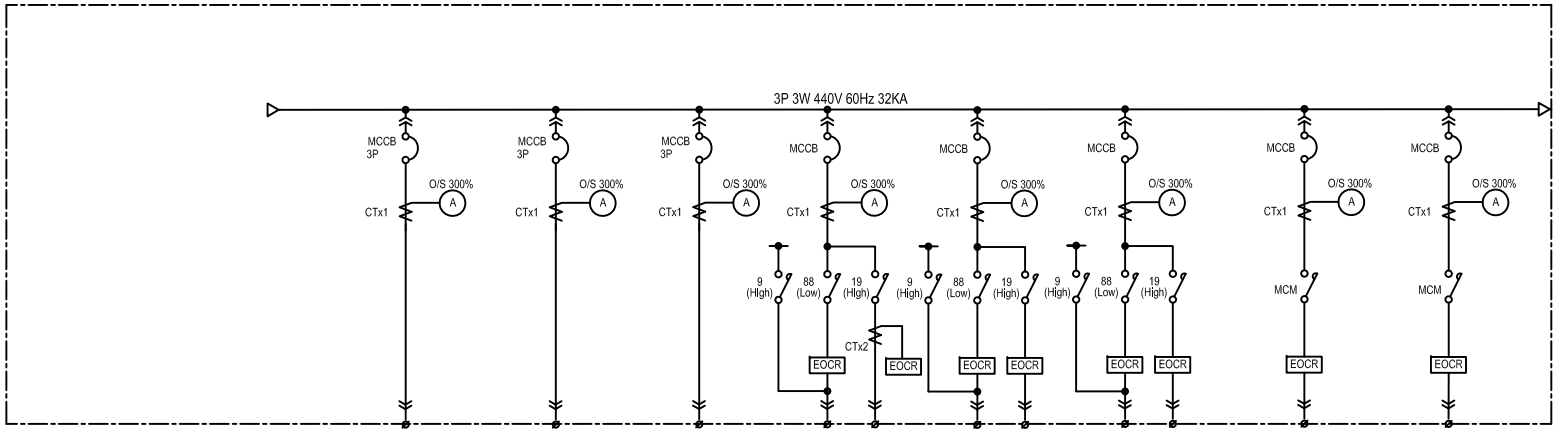


| ITEM NO | | | | | | | | |
|---|---|---|---|---|---|---|---|---|
| SERVICE | | SPARE-3 | SPARE-4 | SPARE-5 | SPARE-6 | SPARE-7 | SPARE-8 | SPARE-9 | SPARE-10 |
| LOAD CAPACITY (KW) | | 20KVA | 10KVA | 10KVA | 37 / 18.5KW | 22 / 11KW | 15 / 7.5KW | 7.5KW | 7.5 |
| MCCB AF/AT | | T2N160 TMD80 | T2N160 TMD40 | T2N160 TMD40 | T2N160 MA100 | T2N160 MA80 | T2N160 MA52 | T2N160 MA32 | T2N160 MA32 |
| MAGNETIC CONTACTOR | MCM(88) | | | | A40 | A26 | A16 | A16 | A16 |
| | MCD(19) | | | | A75 | A50 | A30 | | |
| | MCY(9) | | | | A40 | A26 | A16 | | |
| Dz/Fuse | | | | | BKM 2A | BKM 2A | BKM 2A | BKM 2A | BKM 2A |
| EOCR | | | | | EOCR-SS05,60 | EOCR-SS60,30 | EOCR-SS60, 30 | EOCR-SS30 | EOCR-SS30 |
| CT | | 75/5A | 40/5A | 40/5A | 100/5A<br>75/5Ax2(EOCR) | 75/5A | 50/5A | 30/5A | 30/5A |
| AM | | 0~75A | 0~40A | 0~40A | 0~100~300A | 0~75~225A | 0~50~150A | 0~30~90A | 0~30~90A |
| POWER TB (A) | | 3P 100A | 3P 60A | 3P 60A | 3P 100A X 2 | 3P 60AX2 | 3P 60Ax2 | 3P 30A | 3P 30A |
| POWER WIRE (Sq) | | 16 | 6 | 6 | 35x2 | 16x2 | 10x2 | 6 | 6 |
| ON DELAY TIMER | | - | - | - | 1 | 1 | 1 | - | - |
| PBL / PL | | - | - | - | 1/2 | 1/2 | 1/2 | 1/2 | 1/2 |
| Aux Relay(MY4 4a4b) | | - | - | - | 5 | 5 | 5 | 3 | 2 |
| SEQUENCE TYPE | | FEEDER | FEEDER | FEEDER | A | A-1 | A-1 | C | C-2 |
| DOOR TYPE | | B | B | B | A | A | A | D | D |
| LOP | | | | | | | | | |
| UNIT NO | | MCC-1-4R-8 | MCC-1-2R-4 | MCC-1-2R-5 | MCC-1-2R-6 | MCC-1-1R-1 | MCC-1-1R-2 | MCC-1-1R-3 | MCC-1-1R-4 |

| REV. | DATE | DRN | CHKD | APPD | DESCRIPTION |
|---|---|---|---|---|---|

CLIENT

CONTRACTOR

(주) 호 원 아 이 엔 씨
HOWON Instrument & control Co., Ltd.

PROJECT

| | | |
|---|---|---|
| JOB No. | - | TITLE: MCC PANEL SINGLE LINE DIAGRAM |
| DRAWN | S.Y.SUN | |
| CHECKED | J.WN.LEE | |
| APPROVED | Y.B.YOO | |
| SCALE | DATE DRAWN | DWG NO.: REV. |
| N/A | May.15'15 | |
| TECHNICAL NO. | | CLIENT DWG NO.: REV. |
| - | | |

A3 (420 x 297 m/m)

# MCC - 1

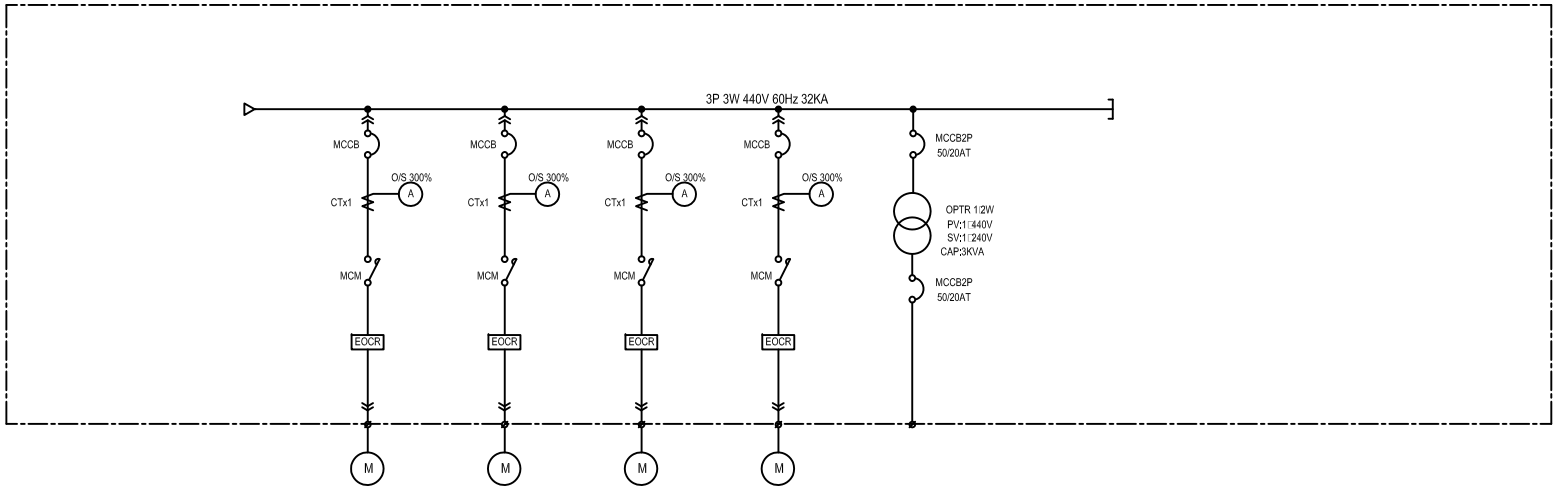


| ITEM NO | | MTR031 | MTR032 | MTR033 | MTR034 | POWER | | | | |
|---|---|---|---|---|---|---|---|---|---|---|
| SERVICE | | MOTOR 031 | MOTOR 032 | MOTOR 033 | MOTOR 034 | CONTROL SOURCE | | | | |
| LOAD CAPACITY (KW) | | 1.5KW | 1.5KW | 1.5KW | 1.5KW | 3 KVA | | | | |
| MCCB AF/AT | | T2N160 MA20 | T2N160 MA20 | T2N160 MA20 | T2N160 MA20 | | | | | |
| MAGNETIC CONTACTOR | MCM(88.Low) | A9 | A9 | A9 | A12 | | | | | |
| | MCD(19.High) | | | | | | | | | |
| | MCY(9.High) | | | | | | | | | |
| Dz/Fuse | | BKM 2A | BKM 2A | BKM 2A | BKM 2A | BF 52/20AT | | | | |
| EOCR | | EOCR-SS05 | EOCR-SS05 | EOCR-SS05 | EOCR-SS05 | | | | | |
| CT | | 10/5A | 10/5A | 10/5A | 10/5A | | | | | |
| AM | | 0~10~30A | 0~10~30A | 0~10~30A | 0~10~30A | | | | | |
| POWER TB (A) | | 3P 30A | 3P 30A | 3P 30A | 3P 30A | 3P 30A | | | | |
| POWER WIRE (Sq) | | 4 | 4 | 4 | 4 | | | | | |
| ON DELAY TIMER | | - | - | - | - | | | | | |
| PBL / PL | | 1/2 | 1/2 | 1/2 | 1/2 | | | | | |
| Aux Relay(MY4 4a4b) | | 3 | 3 | 3 | 3 | | | | | |
| SEQUENCE TYPE | | C-2 | C-2 | C-2 | C-2 | | | | | |
| DOOR TYPE | | D | D | D | D | | | | | |
| LOP | | | | | | | | | | |
| UNIT NO | | MCC-1-3R-1 | MCC-1-3R-2 | MCC-1-3R-3 | MCC-1-3R-4 | | | | | |

| REV. | DATE | DRN | CHKD | APPD | DESCRIPTION |
|---|---|---|---|---|---|
| | | | | | |

CLIENT

CONTRACTOR

(주) 호 원 아 이 엔 씨
HOWON Instrument & control Co., Ltd.

PROJECT

| | | |
|---|---|---|
| JOB No. | - | TITLE: MCC PANEL SINGLE LINE DIAGRAM |
| DRAWN | S.Y.SUN | |
| CHECKED | J.MIN.LEE | |
| APPROVED | Y.B.YOO | |
| SCALE N/A | DATE DRAWN May.15'15 | DWG NO.: REV. |
| TECHNICAL NO. - | | CLIENT DWG NO.: REV. |

A3 (420 x 297 m/m)

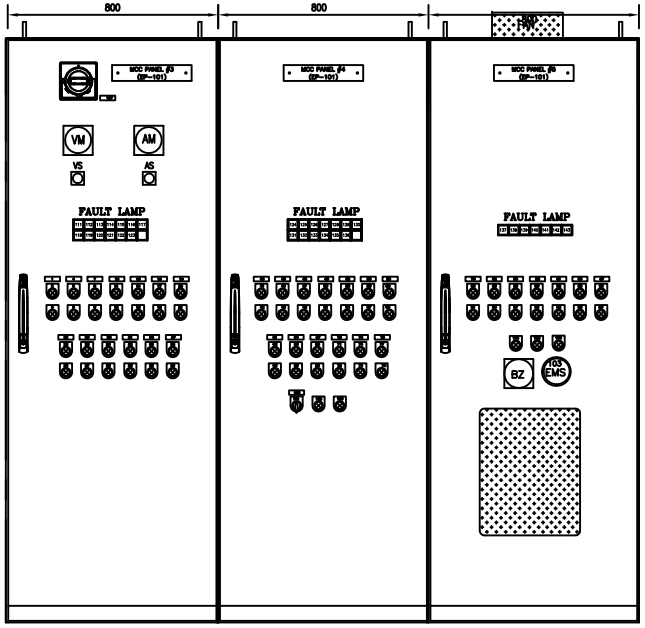


FRONT VIEW

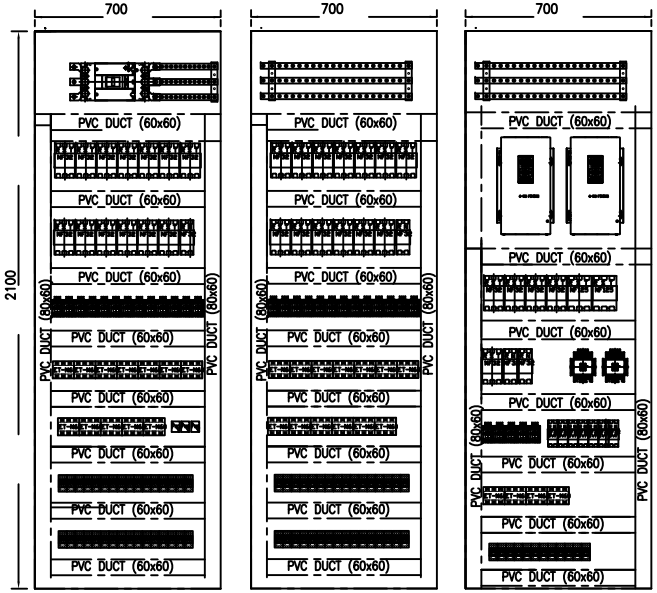


FRONT INNER VIEW

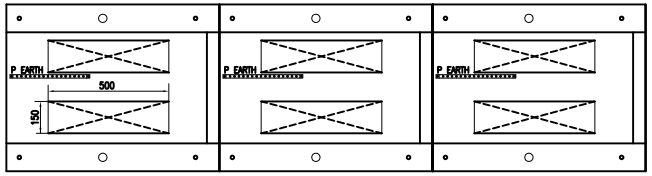


BUTTON VIEW

※ REMARKS

1. PANEL DIMENSION : 800W*800D*2300H
2. BASE SIZE : 100*50 CHANNEL
3. TYPE : SELF STANDING
4. MATERIAL : STEEL
5. PAINTING : RAL 7035
6. HANDLE TYPE : TS8611.290
7. ISOLATOR DOOR LOCKING PANEL : RITTAL
   Adjacent door cannot be opened until the main door has been opened.

| NO. | DATE | REVISIONS | DRAWIN BY | DESIGNED BY | CHECKED BY |
|---|---|---|---|---|---|
| 1 | 13.11.07 | A.F.C | | | |
| 0 | 13.09.09 | A.F.D | | | |

CUSTOMER

(주) 호원아이엔씨
HOWON Instrument & control Co., Ltd.

PROJECT

TITLE: MCC-2 PANEL LAYOUT

SCALE: 1/1

DATE

DWG No.

SHEET No.

CONT. No.

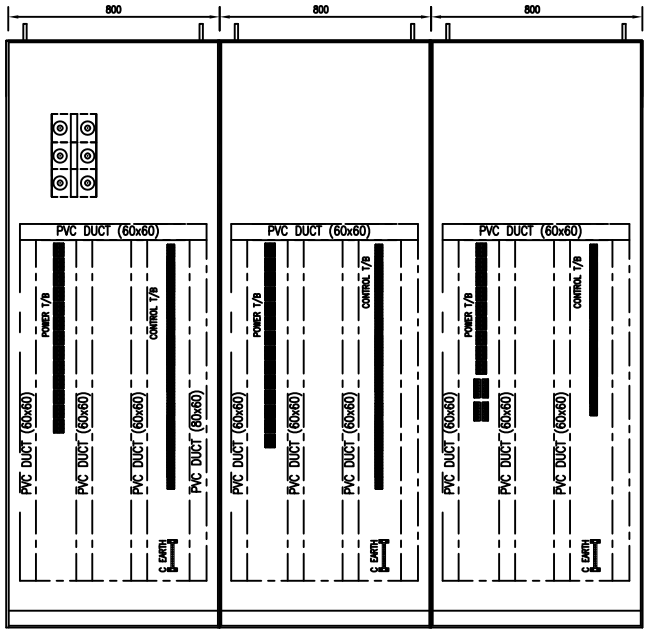


REAR VIEW

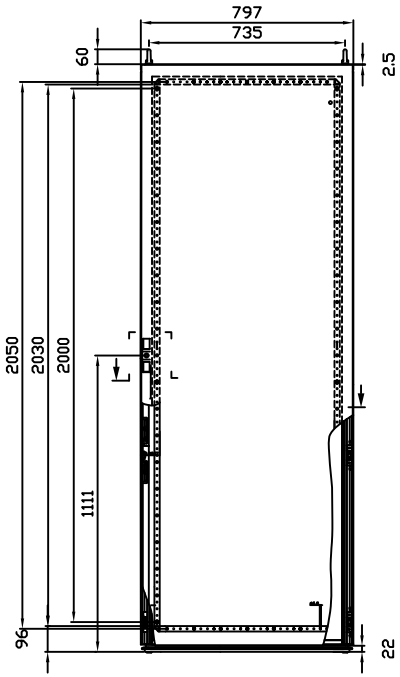


FRONT INNER VIEW

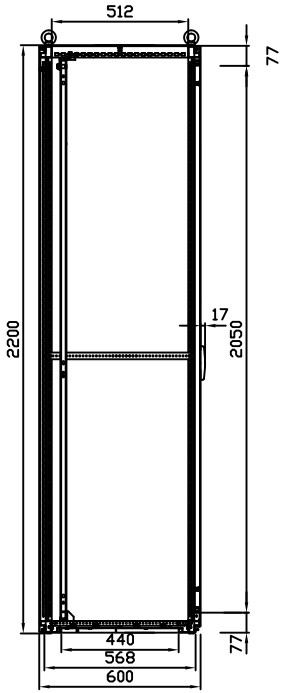


SIDE VIEW

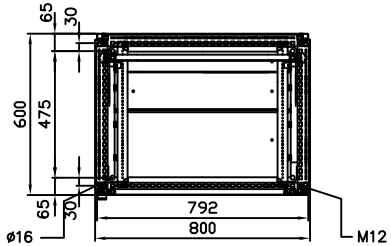


BUTTOM VIEW

| NO. | DATE | REVISIONS | DRAWIN BY | DESIGNED BY | CHECKED BY |
|---|---|---|---|---|---|
| 3 | | | | | |
| 2 | | | | | |
| 1 | 13.11.07 | A.F.C | | | |
| 0 | 13.09.09 | A.F.D | | | |

CUSTOMER

(주) 호원아이엔씨
HOWON Instrument & control Co., Ltd.

PROJECT

TITLE: MCC-2 PANEL LAYOUT

SCALE: 1/1

DATE

DWG No.

SHEET No.

CONT. No.

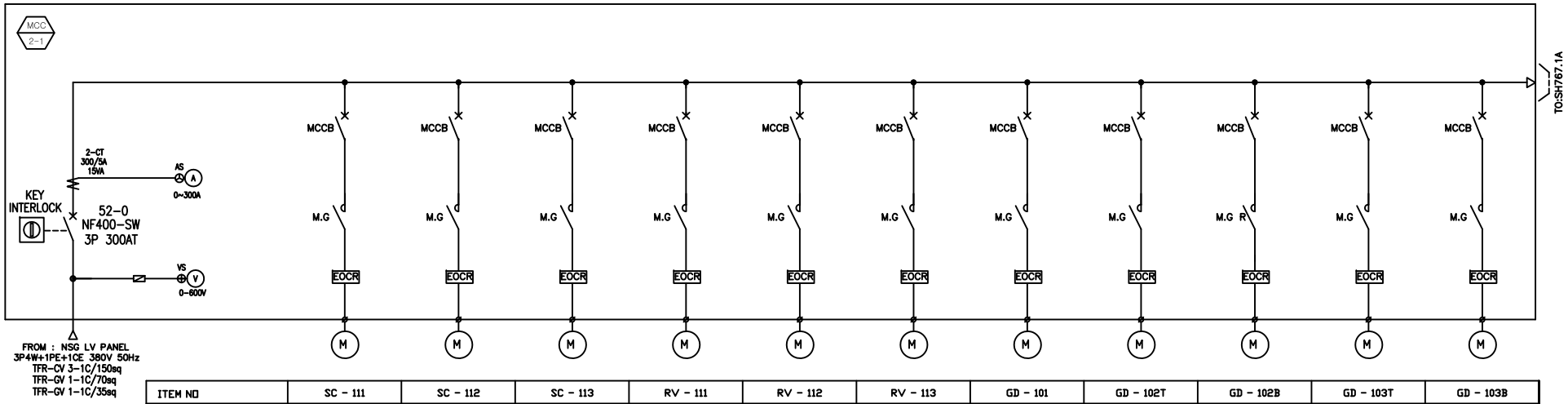


| ITEM NO | | SC - 111 | SC - 112 | SC - 113 | RV - 111 | RV - 112 | RV - 113 | GD - 101 | GD - 102T | GD - 102B | GD - 103T | GD - 103B |
|---|---|---|---|---|---|---|---|---|---|---|---|---|
| SERVICE | | EP FIELD1 SCREW CONVEYOR | EP FIELD2 SCREW CONVEYOR | EP FIELD3 SCREW CONVEYOR | EP FIELD1 ROTARY VALVE | EP FIELD2 ROTARY VALVE | EP FIELD3 ROTARY VALVE | GDW1 LAYER RAPPER | GDW2 LAYER RAPPER | GDW2 LAYER RAPPER | OUTLET GDW RAPPER | OUTLET GDW RAPPER |
| LOAD CAPACITY (KW) | | 2.2 | 2.2 | 2.2 | 0.75 | 0.75 | 0.75 | 0.2 | 0.2 | 0.2 | 0.2 | 0.2 |
| MCCB AF/AT | | NF32-SV 3P/10A | NF32-SV 3P/10A | NF32-SV 3P/10A | NF32-SV 3P/10A | NF32-SV 3P/10A | NF32-SV 3P/10A | NF32-SV 3P/10A | NF32-SV 3P/10A | NF32-SV 3P/10A | NF32-SV 3P/10A | NF32-SV 3P/10A |
| MAGNETIC CONTACTOR | MCM (88) | S - N12 | S - N12 | S - N12 | S - N12 | S - N12 | S - N12 | S - N12 | S - N12 | S - N12 | S - N12 | S - N12 |
| | MCD (88) | | | | | | | | | | | |
| | MCY (88) | | | | | | | | | | | |
| EOCR | | ET - N60 4A | ET - N60 4A | ET - N60 4A | ET - N60 4A | ET - N60 4A | ET - N60 4A | ET - N60 4A | ET - N60 4A | ET - N60 4A | ET - N60 4A | ET - N60 4A |
| CT | | | | | | | | | | | | |
| AM | | | | | | | | | | | | |
| POWER TB (A) | | 3P 30A | 3P 30A | 3P 30A | 3P 30A | 3P 30A | 3P 30A | 3P 30A | 3P 30A | 3P 30A | 3P 30A | 3P 30A |
| POWER WIRE (Sq) | | 4 | 4 | 4 | 4 | 4 | 4 | 4 | 4 | 4 | 4 | 4 |
| CONDENSER(UF) | | | | | | | | | | | | |
| PBL / PL(S/S) | | 3 / (1) | 3 / (1) | 3 / (1) | 3 / (1) | 3 / (1) | 3 / (1) | 3 / (1) | 3 / (1) | 3 / (1) | 3 / (1) | 3 / (1) |
| Aux Relay (G2A-434A-N | 4a4b) | 2 | 2 | 2 | 2 | 2 | 2 | 2 | 2 | 2 | 2 | 2 |
| SEQUENCE TYPE | | | | | | | | | | | | |
| DOOR TYPE | | | | | | | | | | | | |
| LOP PANEL TYPE | | | | | | | | | | | | |
| OTHER'S | | | | | | | | | | | | |
| REMARK | | 1) MCCB : MITSUBISHI<br>2) MAGNETIC CONTACTOR : MITSUBISHI<br>3) EOCR : MITSUBISHI<br>4) RELAY : OMRON<br>5) MISCELLANEOUS : MADE IN KOREA(CE Certi.) | | | | | | | | | | |

| NO. | DATE | REVISIONS | DRAWIN BY | DESIGNED BY | CHECKED BY |
|---|---|---|---|---|---|
| △ | | | | | |
| △ | | | | | |
| 1 | 13.11.07 | | | | |
| 0 | 13.09.09 | | | | |

CUSTOMER

(주) 호원아이엔씨
HOWON Instrument & control Co., Ltd.

PROJECT

TITLE: MCC-2 PANEL
SINGNAL LINE 1

SCALE: 1/1
DATE
DWG No.
SHEET No.
CONT. No.